Overview

Part of the TruVision™ line of products, the PTZ Mini 12X camera is a compact, affordable video surveillance solution featuring a form factor that provides the added security of PTZ functionality in a small size. Designed as a cost-effective solution for internal and external applications, the PTZ Mini offers full video coverage with 12X color and 12X day/night options, both with 12X digital zoom.

The 540 TVL resolution delivers crisp, clear images. This is complemented by full 360-degree endless pan travel at up to 300 degrees per second for full movement and tracking through all fields of view. With up to 128 presets, eight patterns and four shadow tours, the PTZ Mini 12X helps increase user efficiency in attended and unattended operations. With a five-minute installation time and indoor and IP66 outdoor versions, the PTZ Mini is an ideal surveillance option for retail, commercial and small business environments.

Standard Features

- Extremely compact and powerful, well suited for limited-space applications
- 12X color and 12X day/night camera options with 12X digital zoom provide full video coverage in a variety of installation applications
- Full 540 TVL resolution delivers sharp, clear images
- 360° endless pan travel at up to 300° per second means full movement and tracking through all fields of view
- Indoor and outdoor (IP66) versions offers flexible installation options
- Auto home feature, privacy zones and schedule functions increase user efficiency in attended and unattended operations
- Up to 128 presets, 8 patterns, 4 shadow tours increase user efficiency in attended and unattended operations
- 5-minute installation time increases installer efficiency
- Multiple installation options

TruVision™ PTZ Mini 12X

540TVL Mini PTZ Cameras

TVP-12
Indoor Series

TVP-12
Outdoor Series

GE
Security

Australia
T 61-3-9239-1200
F 61-3-9239-1299

gesecurity.com.au

Specifications subject to change without notice.

© 2010 General Electric Company
All Rights Reserved

Specifications

TruVision ™ PTZ Mini		
Physical Characteristics		
Operating environment	**Indoor**	**Outdoor**
Operating temperature	0° - 40° C	-30° - 45° C
Environmental rating		IP 66
Sunshield/Heater/Fan		Yes
Conformity	N4131	
Power	**Indoor**	**Outdoor**
Power source	AC24V	AC24V
Power consumption	14W	52W (w/heater)

Cameras	
Optical zoom	12 x
Digital zoom	12 x
Total zoom	144x
Sensitivity (color)	1 lux
Sensitivity (B/W model)	0.2 lux (day/night model)
Scanning system	1/4" CCD, interlace
Focal length	3.8 - 45.6 mm
Focus mode	Auto/Manual
White balance	Auto/Manual
Effective pixels	PAL: 440k
Horizontal resolution	540 TVL
Electronic shutter	PAL: 1/1.5 - 1/10k sec.
Mechanical	
Pan travel range	360° endless
Tilt travel range	-10° - 190°
Backlight compensation	Yes
Auto iris control	Yes
Auto gain control	Yes

Presets	256 (Max 128 on GE protocols)
Sequences	8
Auto-pan patterns	8
Tours	8
Zone titles	16
Auto home function	Yes
Auto-flip	Digital/Mechanical/Off
Privacy zones	16
Digital slow shutter	Yes
Day/Night: IR cut filter	Day/Night models only

Communications	
Connection	GE RS422; GE RS485; Pelco P&D, Vicon, VCL, Philips, AD, JVC
Maximum devices	255

Alarm	
Alarm inputs	8

Ordering Information

TVP-12DNP	TruVision Mini PTZ, 12X, D/N, Indoor, PAL
TVP-12DN-EP	TruVision Mini PTZ, 12X, D/N, Outdoor IP66, PAL
Available Accessories	
TVP-FM	TruVision Mini PTZ indoor flush mount
TVP-WM	TruVision Mini PTZ short wall mount
TVP-LWM	TruVision Mini PTZ long wall mount
TVP-IWA	TruVision Mini PTZ indoor wall adapter (requires TVP-WM or TVP-LWM)
TVP-ISB	TruVision Mini PTZ indoor smoked bubble
TVP-ESB	TruVision Mini PTZ outdoor smoked bubble

Dimensional Diagram

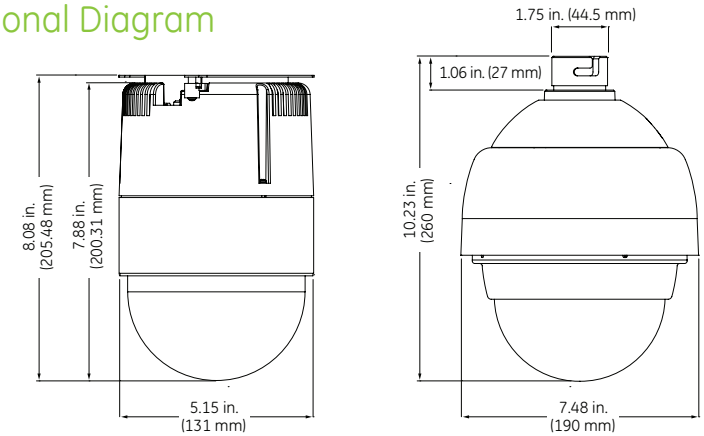

imagination at work